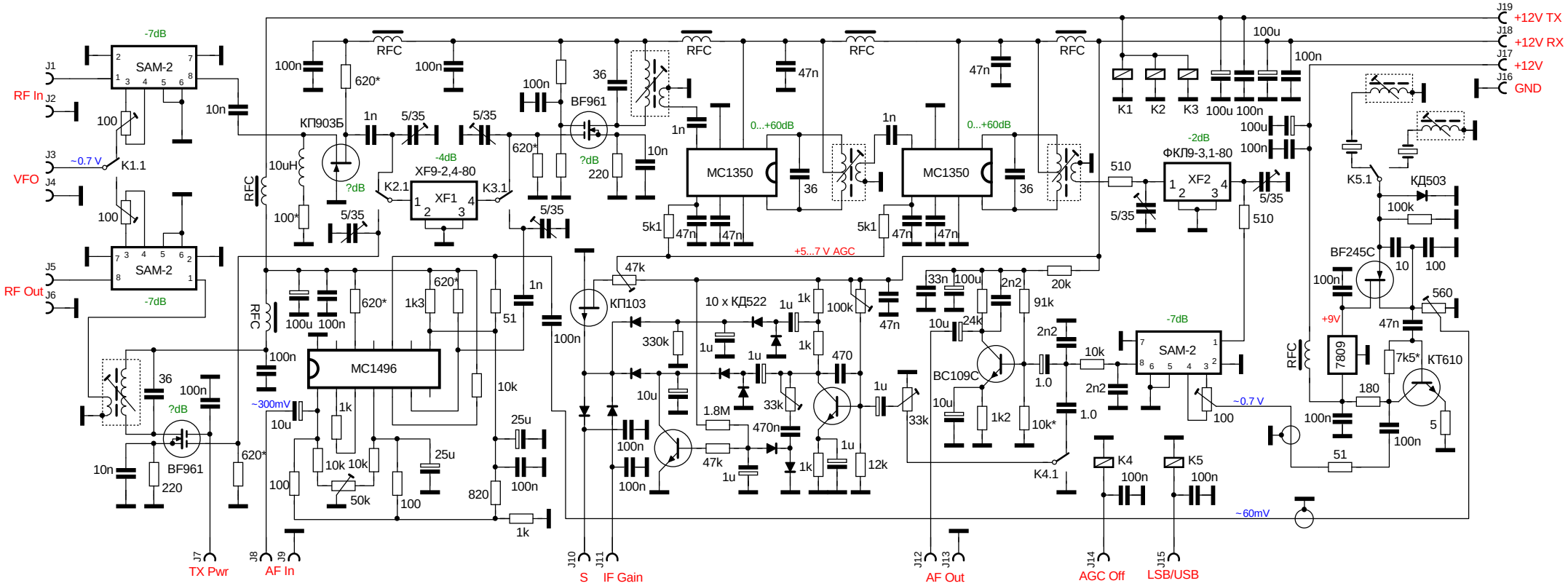
J1
RF In
J2
J3
VFO
J4
J5
RF Out
J6
SAM-2
-7dB
100
10n
~0.7 V
K1.1
RFC
10uH
КП903Б
?dB
620*
100n
1n
5/35
-4dB
XF9-2,4-80
XF1
K2.1
K3.1
36
BF961
220
MC1350
0...+60dB
47n
5k1
+5...7 V AGC
ФКЛ9-3,1-80
XF2
-2dB
510
K1
K2
K3
100u
J19
+12V TX
J18
+12V RX
J17
+12V
J16
GND
K5.1
КД503
100k
BF245C
10
560
47n
+9V
7809
7k5*
КТ610
180
5
51
MC1496
1k3
51
10k
25u
820
1k
~300mV
50k
КП103
10 x КД522
330k
1.8M
470n
470
12k
33k
K4.1
BC109C
24k
91k
20k
2n2
1.0
10k*
1k2
K4
K5
~60mV
~0.7 V
J7
TX Pwr
J8
AF In
J9
J10
S
J11
IF Gain
J12
J13
AF Out
J14
AGC Off
J15
LSB/USB