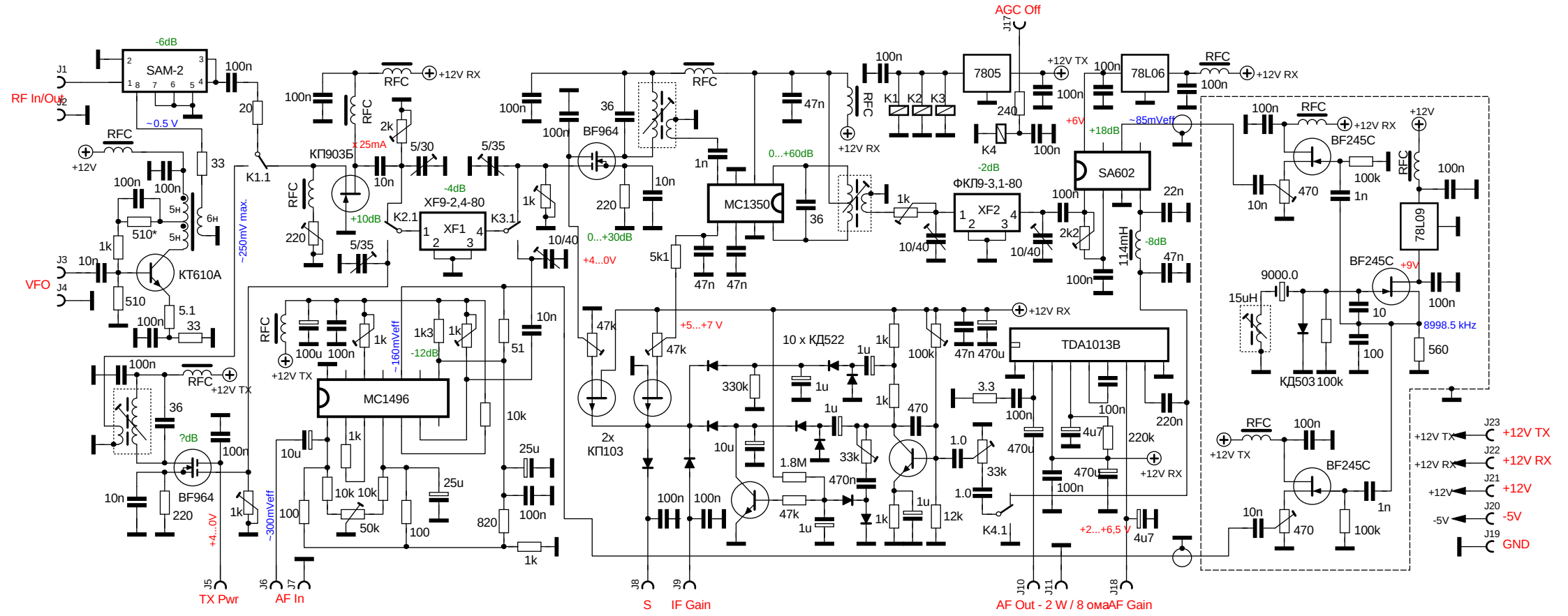
RF In/Out
J1
J2
SAM-2
-6dB
100n
~0.5 V
RFC
+12V
33
100n
100n
5н
510*
5н
6н
1k
10n
VFO
J3
J4
КТ610А
510
5.1
100n
33
K1.1
20
~250mV max.
КП903Б
x 25mA
+10dB
2k
5/30
5/35
10n
220
5/35
K2.1
XF9-2,4-80
-4dB
XF1
K3.1
1k
10/40
0...+30dB
+4...0V
+12V RX
BF964
36
220
10n
100n
100n
RFC
1n
MC1350
0...+60dB
47n
36
5k1
47n
47n
+12V RX
RFC
K1
K2
K3
K4
100n
7805
240
100n
+12V TX
AGC Off
J17
+6V
+18dB
~85mVeff
78L06
100n
RFC
+12V RX
SA602
-2dB
ФКЛ9-3,1-80
XF2
1k
10/40
100n
2k2
114mH
-8dB
22n
47n
100n
RFC
+12V RX
BF245C
100k
470
10n
1n
+12V
RFC
100n
78L09
BF245C
+9V
100n
9000.0
15uH
10
8998.5 kHz
560
100
КД503
100k
RFC
100n
+12V TX
BF245C
1n
10n
470
100k
RFC
100n
+12V TX
36
?dB
100n
BF964
220
10n
+4...0V
1k
~300mVeff
J5
TX Pwr
J6
J7
AF In
RFC
100u
100n
+12V TX
1k
~160mVeff
1k3
1k
-12dB
51
10n
MC1496
10u
1k
10k
10k
50k
100
25u
25u
820
100n
1k
47k
47k
+5...+7 V
2x
КП103
100n
100n
J8
S
J9
IF Gain
10 x КД522
330k
1u
1u
1u
1k
1k
1.8M
470n
33k
47k
1u
1k
470
1u
12k
100k
47n
470u
+12V RX
TDA1013B
3.3
100n
470u
4u7
100n
220n
220k
1.0
33k
1.0
K4.1
470u
100n
+12V RX
+2...+6,5 V
4u7
J10
J11
J18
AF Out - 2 W / 8 ом
AF Gain
J23
+12V TX
J22
+12V RX
J21
+12V
J20
-5V
J19
GND